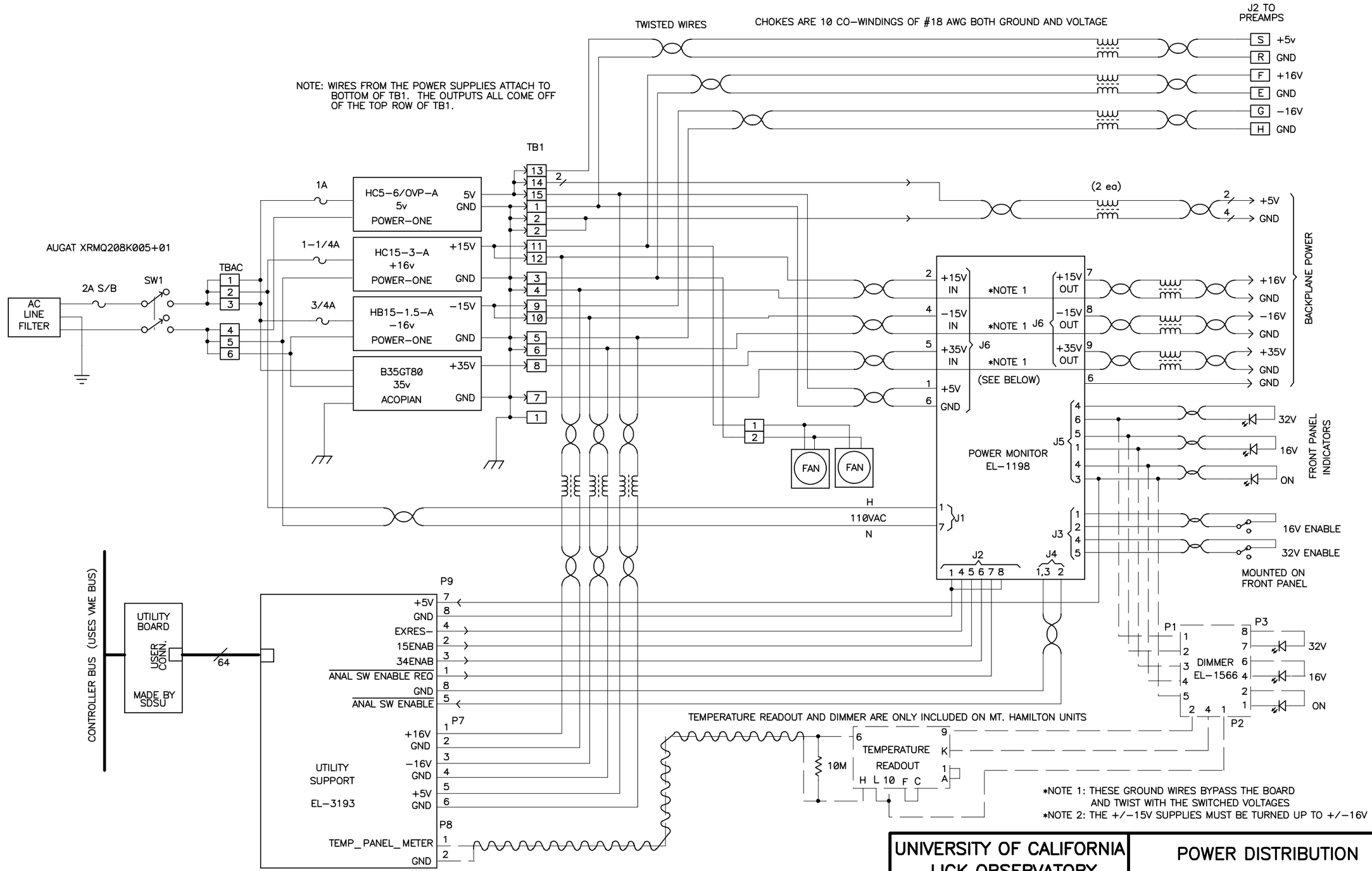

REVISION

10-14-96 ADDED GND ON A32 OF INTERCONNECT CARD FOR POWER MONITOR
01-08-97 CHANGED TITLES FROM PFCAM TO SDSU CCD CONTROLLER
01-30-98 REWORKED SCHEMATIC TO REFLECT SDSU2 TYPE CONTROLLER
05-07-98 CHANGED +/-15V SUPPLIES TO +/-16V FOR SDSU-2 BOARDS

UNIVERSITY OF CALIFORNIA
LICK OBSERVATORY

POWER DISTRIBUTION
SDSU2 CCD CONTROLLER

DES'N BY: B. Alcott	ORIGIN DATE: 4/1/96	DWG. NO.	NUM. 1 OF 1
Last SN	MODIFY DATE: 5-7-98	EL-3275-1L	
PATH: SDSUCCD\PWRDIS	REV.B		